USER GUIDE
LE42DP

2020 MODEL

Multicurrent LED power supply dimmable by push button, DALI signal, 0/1-10V signal

- Multicurrent LED driver with active PFC.
- Suitable for current powered LEDs.
- The function mode is selected by means of the DIP-SWITCH, which is below the terminal cover.

- Brightness adjustment through DALI signal, Push-button, 1-10V or 0-10V interface suitable for working both with potentiometers and active systems such as Gateway, Konnex Interfaces, Touch Screen, ecc.
- MASTER/SLAVE Function with standard cable.

Energy efficiency at full load (1050mA): 88%
Stand-by power (Psb): 0,46W

General Characteristics
- Plastic case.
- Driver for independent mounting.
- Electric class protection II.
- Protection degree IP20.

Type of "hybrid" dimming:
- **LINEAR** from 100% to 12.5%
- **PWM** from 12.5% to 0.5%.

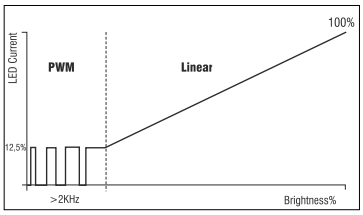

OUTPUT SET		OUTPUT DIP-SWITCH					DIMMING SET	DIMMING DIP-SWITCH				
Potenza Power (W) 220V-240V	Uscita Output	1	2	3	4	5	Dimming	1	2	3	4	5
16,8	350 I 9-48V	-	-	-	-	-	ON/OFF	-	-	-	-	-
19,2	400 I 9-48V	-	-	-	-	ON	Push Slow	ON	-	-	-	-
21,6	450 I 9-48V	-	-	-	ON	-	Push Fast	-	ON	-	-	-
24	500 I 9-48V	-	-	ON	-	-	Push Up/Down	ON	ON	-	-	-
26,4	550 I 9-48V	-	-	ON	-	ON	DALI	-	-	ON	-	-
28,8	600 I 9-48V	-	-	ON	ON	-	1-10 passive	-	ON	ON	-	ON
31,2	650 I 9-48V	-	-	ON	ON	ON	1-10 active	-	ON	ON	-	-
33,6	700 I 9-48V	-	ON	ON	-	-	0-10 active	ON	-	ON	-	-
36	750 I 9-48V	-	ON	ON	-	ON	0-10 passive	ON	-	ON	-	ON
38,4	800 I 9-48V	-	ON	ON	ON	-	Slave	ON	ON	ON	-	-
40,8	850 I 9-48V	-	ON	ON	ON	ON						
36	900 I 9-40V	ON	ON	-	ON	ON	MASTER				-	
38	950 I 9-40V	ON	ON	ON	-	ON	FAN				ON	
40	1000 I 9-40V	ON	ON	ON	ON	-						
42	1050 I 9-40V	ON	ON	ON	ON	ON						

LED	**DIP SWITCH**	**SYNCRO by CABLE**	**max 10 SLAVE**	**EE 88%**
DIM 0/1-10V	**DIM DALI**	**DIM PUSH 230Vac**	**DIM POT 100KΩ**	**Psb 0,46W**

www.leflighting.it

CODICE CODE	Tensione di ingresso Input voltage (Vac)	Frequenza di rete Input frequency (Hz)	Potenza di uscita Output power (W)	n° LED Min-Max Vled≅3V	Tensione di uscita Output voltage (Vdc)	Corrente di uscita Output current (mA)	PFC (λ)	CC CV	Peso Weight (g)
LE42DP	220-240	50÷60	17	3-13	9-48	350	0,93	CC	180
			19,2			400	0,94		
			21,6			450	0,95		
			24	3-12		500			
			26,4			550	0,96		
			28,8			600			
			31,2			650			
			33,6			700			
			36			750			
			38,4			800			
			41			850			
			43			900			
			38	3-10	9-40	950			
			40			1000			
			42			1050			

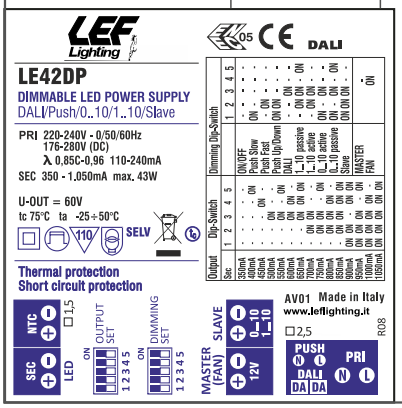

WARNINGS: to maintain SELV insulation and to avoid driver damages, connect to 0..10 or 1..10 terminals only systems with reinforced insulation!

TECHNICAL FEATURES

INPUT
- Input voltage range 220-240Vac.
- Input frequency 50÷60Hz.
- Terminal block for up to 1 x 2,5 mmq.
- Strain relief for cables with diameter Ø = 3...8 mm.
- Max input current: 0,24 A.

OUTPUT
- **Constant output current 350÷1050mA** (selection through dip-switch)
- SELV insulation on output.
- Terminal block for up to 1 x 0,5...1,5 mmq.
- Strain relief for cables with diameter Ø = 3...8 mm.
- Selection of output current and voltage by DIP SWITCH (see table).
- Isolated Auxiliary Output 12V - 100mA max for LED fan.
  At start-up the fan switches on with a delay of about 2 sec.
- Terminal block for external NTC signal for load current reduction: linear brightness decrease from 0,5V (100%) to 0,25V (10%).

OPERATING MODES
- **There are 7 distinct modes of operation read on start-up (the settings have to be made by dip-switch before ignition):**

1) **ON/OFF**
2) **ON/OFF PUSH** (no dimming), with on and off ramps.
3) **PUSH** (push-button) dimming - SLOW profile, FAST profile, UP/DOWN profile
4) **DALI**
5) **1-10V Dimming** , brightness decrease to a preset minimum value without switching off
6) **0-10V Dimming** , brightness decrease until completely shut off
7) **SLAVE**

1-10V/0-10V and PUSH modes are alternatives to each other;
- Dimming time (0-100%; 100-0%):
  -SLOW profile for 10 seconds,
  -FAST profile for 5 seconds;
- The Low Level in PUSH is different from 0 to distinguish it from OFF.

Restart after a power failure:
- in "no dimmer mode" (On/Off), it starts from the last data set;
- in "0-10V or 1-10V dimmer mode", the input value is read and the device switches ON according to the scheduling;
- in "PUSH dimmer mode", the device starts from the last data set.

Note about ON/OFF PUSH (no dimming)
- Briefly press the push-button ON/OFF (on and off ramps)

[AA] Rev. v 8.12 25/10/2022

LEF LIGHTING S.R.L. www.leflighting.it
Viale L.Ariosto 478 - 50019 Sesto Fiorentino (FI) - ITALY | Tel +39 055 421 77 27 - Fax +39 055 425 44 92

USER GUIDE
LE42DP

Wiring diagrams

2020 MODEL

PUSH MODE (Setting by DIP-SWITCH)
- Short press the push-button for ON/OFF.
- Long press the push-button for dimmer.
- Memory of the last data dimming.
  At each ON, the driver starts from the last data set.
- **Method of resynchronization** (sometimes the system could be out of sync, i.e. some lamps will be on, others off, etc.): in OFF/ON position press the push-button for a long time (30 sec), the driver will be 100% and the system will now be resynchronised.
- Max length of PUSH cables: 15 m.
- Max number of drivers: 10.

SLOW PROFILE (SLOW) (Setting by DIP-SWITCH)
- Pressing the push-button, the dimming starts up to the maximum (or minimum) value and then reverses.
  Time from minimum to maximum, 10sec.

FAST PROFILE (FAST) (Setting by DIP-SWITCH)
- Pressing the push-button, the dimming starts up to the maximum (or minimum) value and then reverses.
  Time from minimum to maximum, 5sec.

UP/DOWN PROFILE (UP/DOWN) (Setting by DIP-SWITCH)
- Pressing the push-button, the dimming reverses its direction; once reached the minimum (or maximum) value, the staus is maintained.
  Time from minimum to maximum, 10sec.

DALI MODE (Setting by DIP-SWITCH)
-The dimming level is set by the value of the dali signal sent.

1-10 V (0-10V) MODE
- It is possible to use commercial 1-10V (0-10V) dimmers. LED brightness varies proportionallly to the signal sent to the terminal .
- It is possible to use 100KOhm potentiometers. LED brightness change is proportional or logarithmic depending on the potentiometer model (recommended logarithmic type).

MASTER MODE
- The MASTER function allows the synchronization of multiple drivers (max 10 drivers) that can be set as slaves (for example LE20DP).

Note: In case of Dip-Switch wrong setting, at the start-up, the driver switches ON and the LED flashes 1s ON and 1s OFF.

SLAVE MODE (Setting by DIP-SWITCH)
- Its is possible to use LE42DP in SLAVE mode (max 10).
-The terminal for the "DIM" input is used for the input of the master signal.

DALI MODE

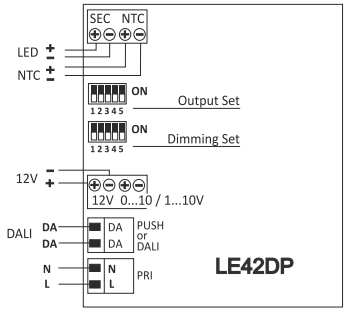

1-10V /0-10V MODE
100Kohm POTENTIOMETER

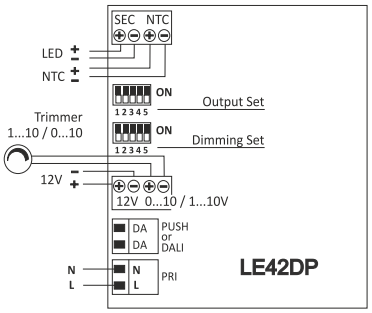

MASTER MODE

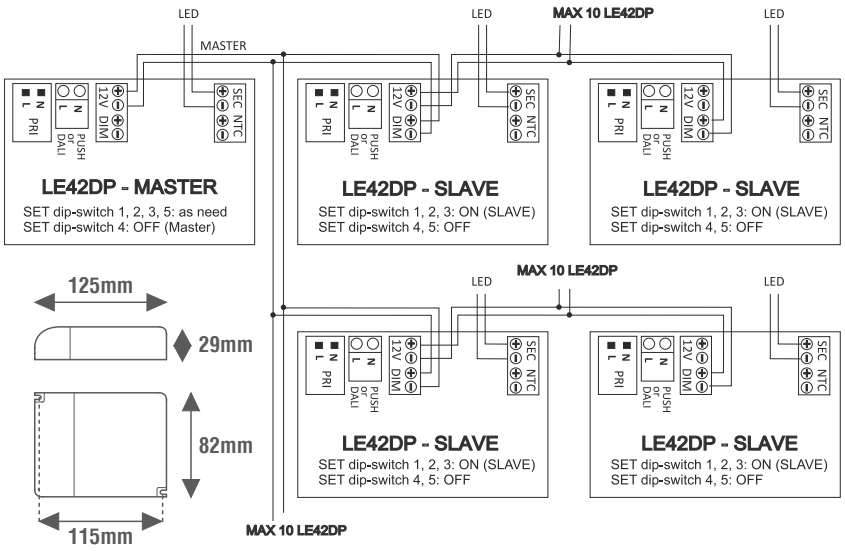

PUSH MODE
SYNCRO OF MORE DRIVERS

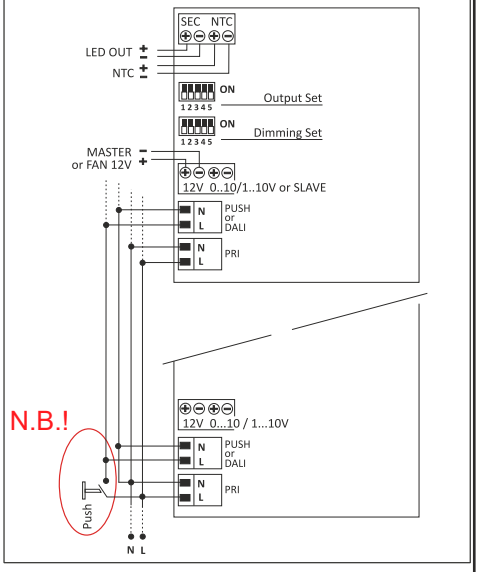

- Protection against overtemperature (OTP)
- Overload protection (OLP)
- Short circuit protection (SCP)
- Open circuit Protection (OCP)
- Power factor correction (PFC) λ ≥ 0,96
- Operating ambient temperature Ta -25°C ÷ +50°C
- Max case temperature on Tc 75°C

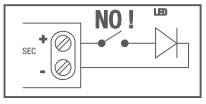

N.B.
Power supply not suitable for no-load operation

Reference Standards
EN55015
EN61000-3-2
EN61347-1
EN61347-2-13
EN61547
EN62384

MADE IN ITALY

PRODUCT TO BE DISPOSED DIFFERENTLY FROM URBAN WASTE
AEE Identification nr.IT18040000010321

SELV | IP20 | ta MAX 50°C | tc MAX 75°C | PFC λ≥0,96 | 43 WATT | CC | 90mm | 22 PAP

[AA] Rev. v 8.12 25/10/2022

LEF LIGHTING S.R.L. www.leflighting.it
Viale L.Ariosto 478 - 50019 Sesto Fiorentino (FI) - ITALY | Tel +39 055 421 77 27 - Fax +39 055 425 44 92